Introductory Control Systems
Implementation of PID Controllers in Electronic Circuits
Reference: Phillips, C. L. and Harbor, R. D., *Feedback Control Systems*, 3rd Ed., Prentice-Hall, 1996.

Transfer functions of controllers having proportional, integral, and derivative (PID) terms can be realized using electronic circuits. Circuits that can be used to form P, PI, PD, and PID controllers using operational amplifiers (op-amps), resistors, and capacitors are presented in the following paragraphs.

Basic Operational Amplifier (Op-Amp) Circuit Transfer Function

The figure at the right shows a simple op-amp circuit with input voltage $V_i(s)$, output voltage $V_o(s)$, input impedance $Z_i(s)$, and feedback impedance $Z_f(s)$. It can be shown that the transfer function of the circuit can be written as

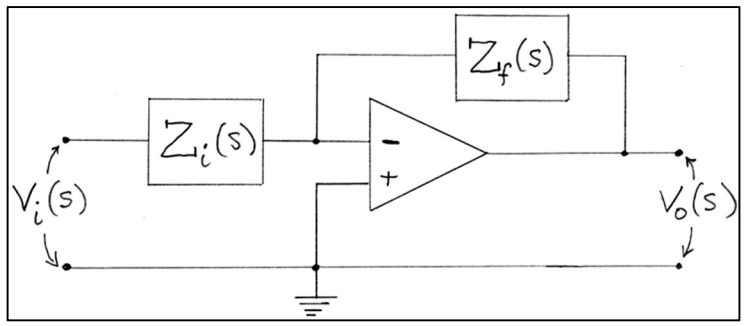

$$G(s) = \frac{V_o}{V_i}(s) = -\frac{Z_f(s)}{Z_i(s)} \quad \text{(Recall that, } V(s) = Z(s)I(s)\text{)}$$

Simple RC circuits can be used to generate the input and feedback impedances required to generate transfer functions for P, PI, PD, and PID controllers.

To understand the implementation of the controllers described below, recall: 1) The total impedance of two components in *series* is the sum of the individual impedances; and 2) The inverse of the total impedance of two components in *parallel* is the sum of the inverses of the individual impedances. Note that the impedance of a resistor with resistance R is $Z(s) = R$, and the impedance of a capacitor of capacitance C is $Z(s) = 1/Cs$. The total impedance of a resistor and a capacitor in series is

$$Z(s) = R + \frac{1}{Cs} = \frac{RCs + 1}{Cs}$$

The inverse of the total impedance of a resistor and capacitor in parallel is $\frac{1}{Z(s)} = \frac{1}{R} + Cs$, so the total impedance of the two in parallel is

$$Z(s) = \frac{R}{RCs + 1}$$

Proportional (P) Controller

To form a P controller, let the input impedance be generated by a resistor of resistance R_i, and let the feedback impedance be generated by a resistor of resistance R_f. In this case, the impedances are $Z_i(s) = R_i$ and $Z_f(s) = R_f$, and the transfer function of the circuit is

$$G(s) = -\frac{R_f}{R_i} = K_p = \text{constant}.$$

Proportional/Integral (PI) Controller

To form a PI controller, let the input impedance be generated by a resistor of resistance R_i and a capacitor of capacitance C_i in parallel, and let the feedback impedance be generated by a capacitor of capacitance C_f. In this case, the impedances are $Z_i = \frac{R_i}{R_i C_i s + 1}$ and $Z_f = \frac{1}{C_f s}$, and the transfer function of the circuit is

$$G(s) = -\frac{1}{C_f s} \cdot \frac{R_i C_i s + 1}{R_i} = -\left[\frac{C_i}{C_f} + \frac{1}{R_i C_f s}\right] = -\left[K_p + \frac{K_i}{s}\right].$$

Proportional/Derivative (PD) Controller

To form a PD controller, let the input impedance be generated by a resistor of resistance R_i and a capacitor of capacitance C_i in parallel, and let the feedback impedance be generated by a resistor of resistance R_f. In this case, the impedances are $Z_i = \frac{R_i}{R_i C_i s + 1}$ and $Z_f = R_f$, and the transfer function of the circuit is

$$G(s) = -R_f \cdot \frac{R_i C_i s + 1}{R_i} = -\left[\frac{R_f}{R_i} + R_f C_i s\right] = -\left[K_p + K_d s\right].$$

Proportional/Derivative (PD) Controller with High Frequency Gain Limit (Phase-Lead Controller)

To form a PD controller with high frequency gain limit, let the input impedance be generated by a resistor of resistance R_i and a capacitor of capacitance C_i in parallel, and let the feedback impedance be generated by a resistor of resistance R_f and a capacitor of capacitance C_f in parallel. In this case, the impedances are $Z_i = \dfrac{R_i}{R_i C_i s + 1}$ and $Z_f = \dfrac{R_f}{R_f C_f s + 1}$, and the transfer function of the circuit is

$$G(s) = -\frac{R_f}{R_f C_f s + 1} \cdot \frac{R_i C_i s + 1}{R_i} = -\left[\frac{R_f}{R_i} + \left(R_f C_i\right)s\right] \cdot \frac{1}{\tau s + 1} = -\left[K_p + K_d s\right] \cdot \frac{1}{\tau s + 1}$$

where $\tau = R_f C_f$. Note here that the controller is of the PD type with a multiplier of $\dfrac{1}{\tau s + 1}$. The parameter τ is chosen to limit the high frequency gain.

Proportional/Integral/Derivative (PID) Controller with High Frequency Gain Limit

To form a PID controller with high frequency gain limit, let the input impedance be generated by a resistor (resistance, R_2) in series with a resistor (resistance, R_1) and a capacitor (capacitance C_1) that are in parallel, and let the feedback impedance be generated by a resistor (resistance, R_f) and a capacitor (capacitance C_f) in series. In this case, the impedances are $Z_i = \dfrac{R_1}{R_1 C_1 s + 1} + R_2$ and $Z_f = \dfrac{R_f C_f s + 1}{C_f s}$. Then, it can be shown that the transfer function of the circuit is

$$G(s) = -\left[\frac{R_1 C_1 + R_f C_f}{(R_1 + R_2) C_f} + \frac{1}{(R_1 + R_2) C_f s} + \left(\frac{R_1 C_1 R_f}{(R_1 + R_2)}\right)s\right] \cdot \frac{1}{\tau s + 1} = -\left[K_p + \frac{K_i}{s} + K_d s\right] \cdot \frac{1}{\tau s + 1}$$

where $\tau = \dfrac{R_1 R_2 C_1}{R_1 + R_2}$. Note that the controller is of the PID type, with a multiplier of $\dfrac{1}{\tau s + 1}$ which can be used to limit the high frequency gain.