Introductory Control Systems
Exercises #5 – Block Diagram Reduction

Use the ***block diagram reduction*** technique to find the ***transfer functions*** associated with each block diagram.

Note: The ***purpose*** of practicing block diagram reduction is to become confident in ***reading*** and ***understanding*** the details of block diagrams. Why is that important? Each diagram provides a ***visual representation*** of a set of equations that together are intended to model the behavior of a system. Understanding the details of the block diagram gives the analyst confidence that the block diagram is an accurate representation of the system.

1. The closed-loop system shown in the block diagram has ***one input*** signal ($R(s)$) and ***two output*** signals ($C(s)$ and $Y(s)$). Find the transfer functions $\frac{Y}{X}(s)$, $\frac{Y}{R}(s)$, and $\frac{C}{R}(s)$.

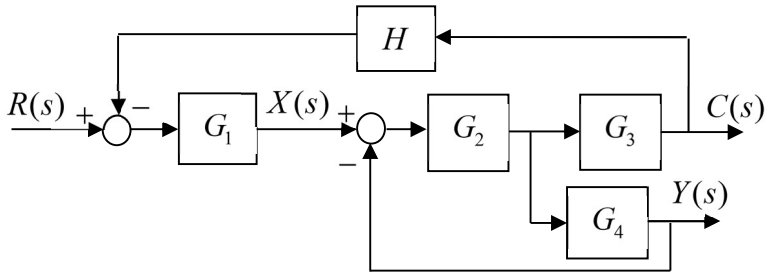

Answers: $\frac{Y}{X}(s)=\frac{G_2G_4}{1+G_2G_4}$ $\frac{Y}{R}(s)=\frac{G_1G_2G_4}{1+G_2G_4+G_1G_2G_3H}$ $\frac{C}{R}(s)=\frac{G_1G_2G_3}{1+G_2G_4+G_1G_2G_3H}$

2. The closed-loop system shown in the block diagram has two input signals ($R(s)$ and $D(s)$) and one output signal ($Y(s)$). Find the transfer functions $\frac{Y}{X}(s)$, $\frac{Y}{R}(s)$, and $\frac{Y}{D}(s)$.

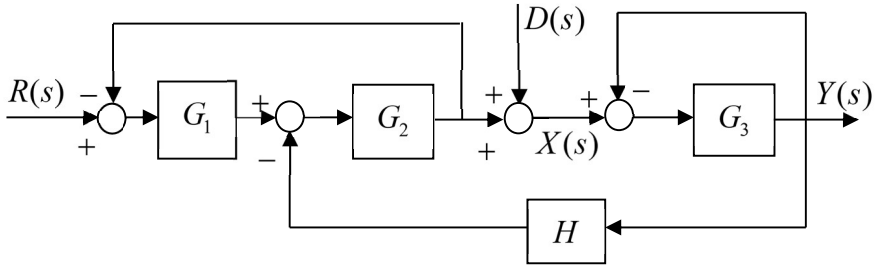

Answers: $\frac{Y}{X}(s)=\frac{G_3}{1+G_3}$ $\frac{Y}{R}(s)=\frac{G_1G_2G_3}{(1+G_1G_2)(1+G_3)+G_2G_3H}$ $\frac{Y}{D}(s)=\frac{G_3(1+G_1G_2)}{(1+G_1G_2)(1+G_3)+G_2G_3H}$

3. The closed-loop system shown in the block diagram has two input signals ($R(s)$ and $D(s)$) and one output signal ($Y(s)$). Find the transfer functions $\frac{B}{A}(s)$, $\frac{Y}{R}(s)$, and $\frac{Y}{D}(s)$.

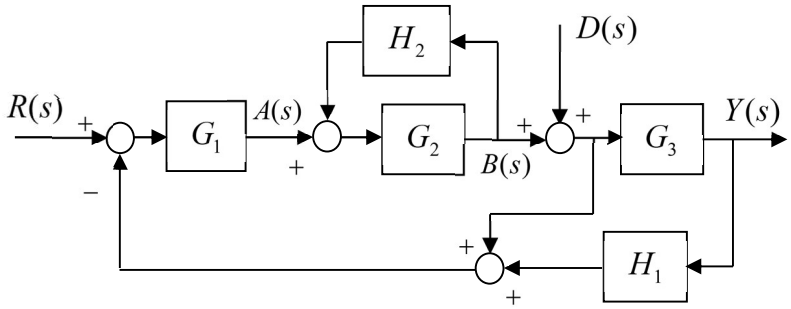

Answers: $\frac{B}{A}(s)=\frac{G_2}{1+G_2H_2}$ $\frac{Y}{R}(s)=\frac{G_1G_2G_3}{1+G_2H_2+G_1G_2(1+G_3H_1)}$ $\frac{Y}{D}(s)=\frac{G_3(1+G_2H_2)}{1+G_2H_2+G_1G_2(1+G_3H_1)}$

4. The closed-loop system shown in the block diagram has ***one input*** signal ($R(s)$) and ***two output*** signals ($C(s)$ and $Y(s)$). Find the transfer functions $\frac{Y}{D}(s)$, $\frac{C}{D}(s)$, and $\frac{Y}{R}(s)$.

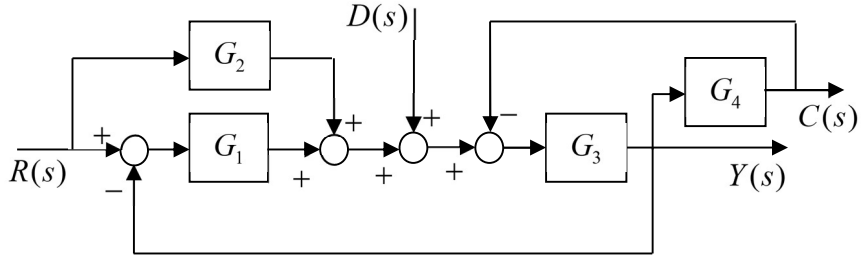

Answers: $\boxed{\frac{Y}{D}(s)=\frac{G_3}{1+G_3(G_1+G_4)}}$ $\boxed{\frac{C}{D}(s)=\frac{G_3G_4}{1+G_3(G_1+G_4)}}$ $\boxed{\frac{Y}{R}(s)=\frac{G_3(G_1+G_2)}{1+G_3(G_1+G_4)}}$

5. The closed-loop system shown in the block diagram has two input signals ($R(s)$ and $D(s)$) and one output signal ($Y(s)$).Find the transfer functions $\frac{Y}{X}(s)$, $\frac{Y}{R}(s)$, and $\frac{Y}{D}(s)$.

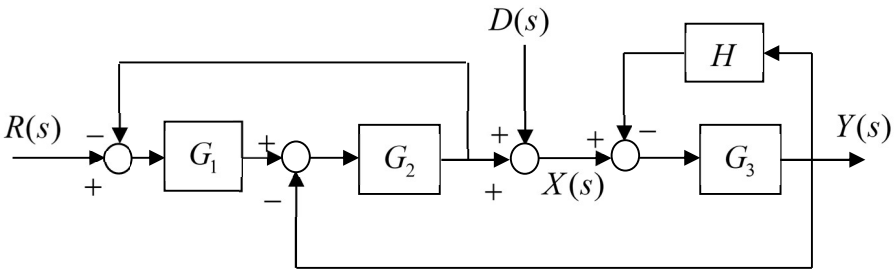

Answers:

$\boxed{\frac{Y}{X}(s)=\frac{G_3}{1+G_3H}}$ $\boxed{\frac{Y}{R}(s)=\frac{G_1G_2G_3}{1+G_1G_2+G_2G_3+G_3H+G_1G_2G_3H}}$ $\boxed{\frac{Y}{D}(s)=\frac{G_3(1+G_1G_2)}{1+G_1G_2+G_2G_3+G_3H+G_1G_2G_3H}}$

6. The closed-loop system shown has ***two input signals***, $R(s)$ and $D(s)$, and ***one output signal*** $Y(s)$. Find the transfer functions $\frac{B}{A}(s)$, $\frac{Y}{R}(s)$, and $\frac{Y}{D}(s)$.

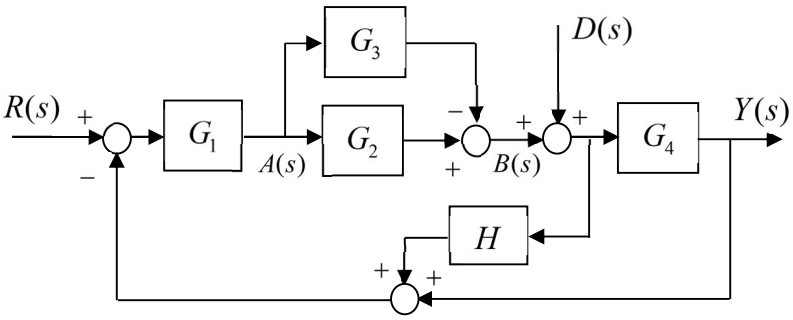

Answers: $\boxed{\frac{B}{A}(s)=G_2-G_3}$ $\boxed{\frac{Y}{R}(s)=\frac{G_1G_4(G_2-G_3)}{1+G_1(H+G_4)(G_2-G_3)}}$ $\boxed{\frac{Y}{D}(s)=\frac{G_4}{1+G_1(H+G_4)(G_2-G_3)}}$

7. The closed-loop system shown has ***two input signals*** ($R(s)$ and $D(s)$) and ***two output signals*** ($Y(s)$ and $C(s)$). Find the transfer functions $\frac{Y}{X}(s)$, $\frac{Y}{R}(s)$, and $\frac{C}{D}(s)$.

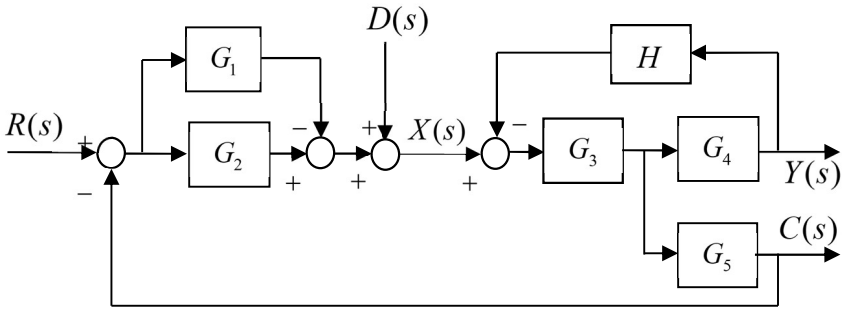

Answers: $\boxed{\frac{Y}{X}(s) = \frac{G_3G_4}{1+HG_3G_4}}$ $\boxed{\frac{Y}{R}(s) = \frac{G_3G_4(G_2-G_1)}{1+HG_3G_4+G_3G_5(G_2-G_1)}}$ $\boxed{\frac{C}{D}(s) = \frac{G_3G_5}{1+HG_3G_4+G_3G_5(G_2-G_1)}}$

8. The closed-loop system shown has ***two*** input signals ($R(s)$ and $D(s)$) and one ***output*** signal ($Y(s)$). Find the transfer functions $\frac{B}{A}(s)$, $\frac{Y}{R}(s)$, and $\frac{Y}{D}(s)$.

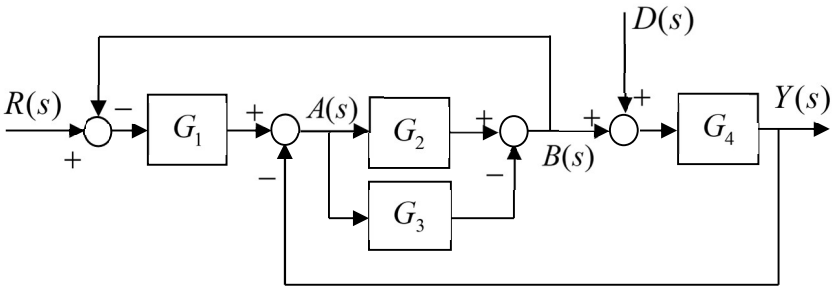

Answers: $\boxed{\frac{B}{A}(s) = G_2 - G_3}$ $\boxed{\frac{Y}{R}(s) = \frac{G_1G_4(G_2-G_3)}{1+(G_2-G_3)(G_1+G_4)}}$ $\boxed{\frac{Y}{D}(s) = \frac{G_4\left[1+G_1(G_2-G_3)\right]}{1+(G_2-G_3)(G_1+G_4)}}$