Intermediate Dynamics
Exercises #2B

1) The antenna system shown has two components, the base B and the antenna dish D. The distance from O to A is L. At any instant, the angle between the y-axis and the fixed Y-axis is given by the angle θ, and the angle between OA and the y-axis is given by the angle ϕ. Calculate $\underset{\sim}{v}_A$ and $\underset{\sim}{a}_A$ the velocity and acceleration of point A using the formulae for a point ***moving*** on a body. (The problem comes from Hibbeler, *Engineering Mechanics*, 1998)

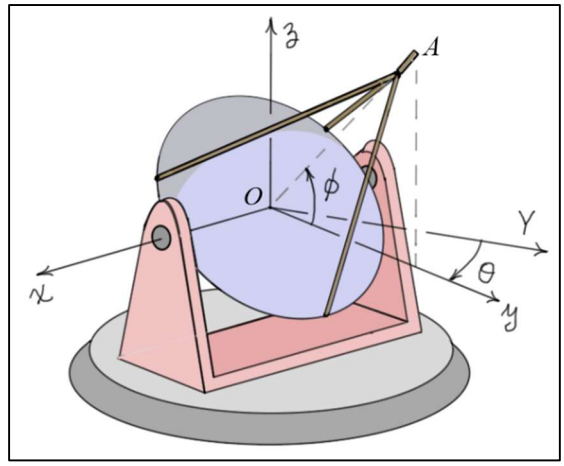

2) The system shown has three components, a vertical column C, a horizontal arm M, and a disk D. The disk has radius r and rotates relative to the arm at a rate of ω_3 (rad/sec). The arm has length L and rotates relative to the column at a rate of ω_1 (rad/sec). The column rotates at a rate of ω_2 (rad/sec). Calculate $\underset{\sim}{v}_A$ and $\underset{\sim}{a}_A$ the velocity and acceleration of point A using the formulae for a point ***moving*** on a body. The angular rates ω_i $(i = 1,2,3)$ are ***not*** constant.

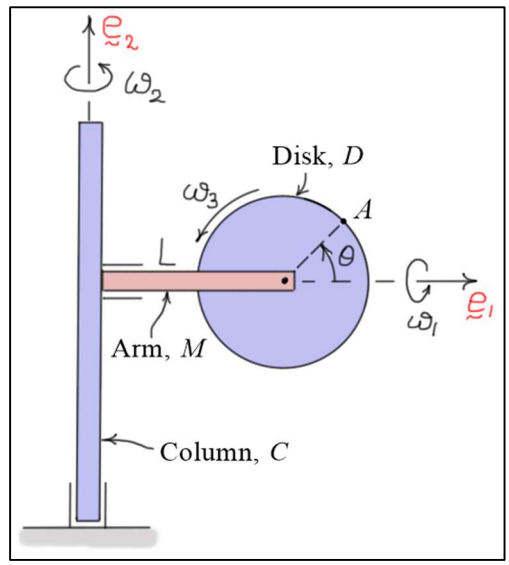

3) The position of the stylus tip A is controlled by the mechanism shown. At the instant shown,

- The stylus has a ***constant*** speed $u = 150$ (mm/sec) relative to arm CD.
- Arm CD rotates at a ***constant*** rate $\omega_2 = 1.6$ (rad/sec) relative to DEG.
- Arm DEG rotates at a ***constant*** rate $\omega_1 = 1.2$ (rad/sec) relative to the ground.

Calculate $\underset{\sim}{v}_A$ and $\underset{\sim}{a}_A$ the velocity and acceleration of A for the instant shown.
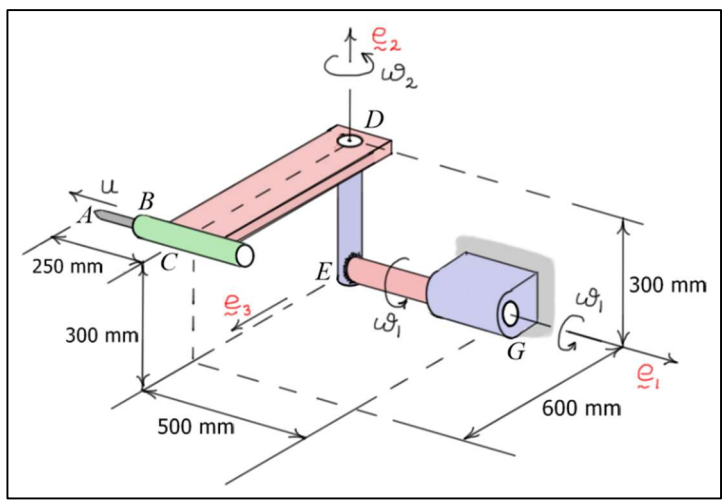
(The problem comes from Beer & Johnston, *Vector Mechanics for Engineers*, 1984)