Intermediate Dynamics
Exercises #10

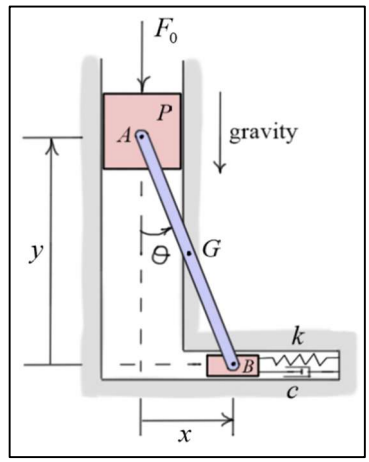

1) Find the equilibrium positions of the system of Exercises #8, problem #1. Use the following data.

$mg = 4$ lb
$m_p g = 3$ lb
$F_0 = 20$ lb

$\ell = 2$ ft
$k = 17.68$ lb/ft

(ℓ is the length of AB)

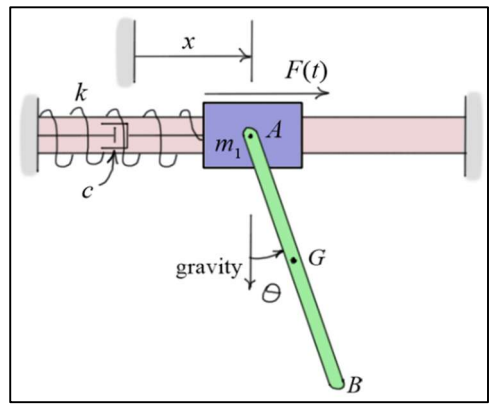

2) Show that $x = \theta = 0$ is an equilibrium position for the system of Exercises #8, problem #2. Linearize the equations of motion about this position and calculate the natural frequencies and mode shapes of the system using the following physical data. Describe the motion of each mode.

$m_1 g = 10$ lb
$m_2 g = 5$ lb

$\ell = 2$ ft
$k = 300$ lb/ft

(ℓ is the length of AB)

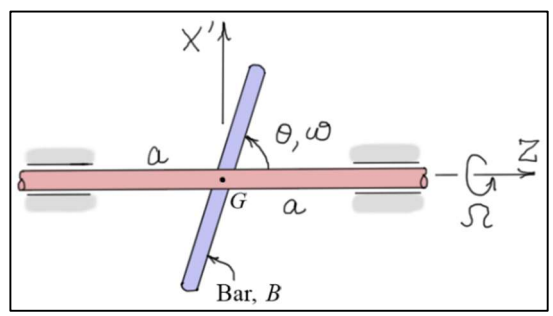

3) Given that $M_\theta = 0$ and $\dot{\phi} = \Omega = \text{constant}$, find the equilibrium positions for the angle θ for the bar of Exercises #8, problem #3. Then linearize the equation of motion about these positions. Determine the stability of small motions about each of these positions. Find the torque M_ϕ required so that $\dot{\phi} = \Omega = \text{constant}$.

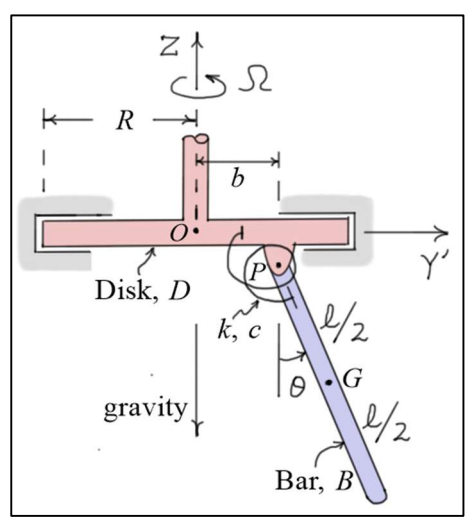

4) Given that $M_\theta = 0$, $\dot{\phi} = \Omega = \text{constant}$, and $b = 0$, show that the equilibrium position for the angle θ for the bar of Exercises #8, problem #4 is approximately $\theta_{eq} \approx 58.7$ (deg). Then linearize the equation of motion about this position and determine the stability of small motions about that position. Find the torque M_ϕ required so that $\dot{\phi} = \Omega = \text{constant}$. Use the following physical data:

$mg = 5$ lb
$\ell = 2$ ft
$c = 0$

$k = 10$ ft-lb/rad
$\Omega = 4\pi$ rad/s