Introductory Motion and Control
Hydraulic Positioning System I

Reference: Dorf and Bishop, *Modern Control Systems*, 10th Ed., Prentice-Hall, 2005.

Positioning System – Definition of Terms

- Incompressible fluid
- A_c = cap end piston area
- A_r = rod end piston area
- m = mass of load
- b = damping coefficient
- P_s = constant supply pressure
- P = pressure on the piston
- p = ΔP, the change in P
- X = valve spool position
- x = ΔX, the change in X
- Y = load position
- y = ΔY, the change in Y

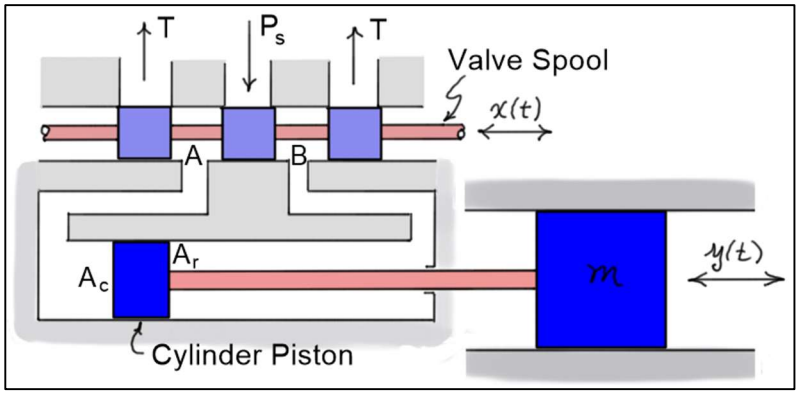

Operation

- If $X > 0$, the ***pressure source*** is applied to the A port of the valve and the ***cap end*** of the cylinder causing the load to ***move right***. Return flow to the tank is though the B port.
- If $X < 0$, the ***pressure source*** is applied to the B port of the valve and the ***rod end*** of the cylinder causing the load to ***move left***. Return flow to the tank is though the A port.

Flow Model

If $X > 0$, the pressure source is applied to the A port of the valve. As a result, fluid flows into the piston chamber. The ***volumetric flow rate*** Q through the valve is a function of the spool position X and the pressure P in the piston chamber.

$$Q = g(X, P) \tag{1}$$

To simplify the model, Eq. (1) can be ***linearized*** about some operational (set) point (X_0, P_0). This is done using a ***Taylor series expansion*** as discussed in earlier notes. The ***change*** in ***flow rate*** can be written as

$$\begin{aligned} q \triangleq \Delta Q &= \left(\frac{\partial g}{\partial X}\right)_{X_0,P_0} \Delta X + \left(\frac{\partial g}{\partial P}\right)_{X_0,P_0} \Delta P \\ &= (k_x)x - (k_p)p \end{aligned} \tag{2}$$

Here, k_x and k_p represent the ***derivatives*** of the function $g(X,P)$ with respect to X and P, respectively. The minus sign in the second of equations (2) indicates the flow rate ***decreases*** as the ***pressure*** in the piston chamber ***increases***.

Assuming the fluid is ***incompressible***, the ***volumetric flow rate*** can be related to the ***speed*** of the piston as follows.

$$Q = A_c \dot{Y} \tag{3}$$

Letting $Q = Q_0 + q$, $\dot{Y} = \dot{Y}_0 + \dot{y}$, and $Q_0 = A_c \dot{Y}_0$, then ***changes*** in the ***volumetric flow rate*** can be related to ***changes*** in the ***speed*** of the piston as follows.

$$q = A_c \, \dot{y} \tag{4}$$

Combining Eqs. (4) and (2) gives a relationship between the ***changes*** in ***pressure***, ***valve spool position***, and ***speed*** of the piston.

$$\boxed{p = (k_x x - A_c \dot{y}) / k_p} \tag{5}$$

<u>Model of Piston Movement</u>

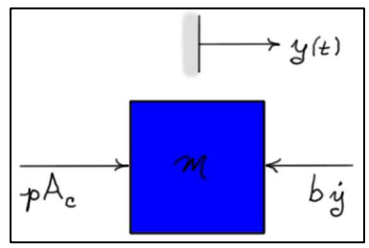

Assuming the pressure on the rod end of the piston is small compared to the pressure on the cap end, Newton's second law gives

$$\boxed{\underset{+}{\rightarrow} \sum F = p\, A_c - b\, \dot{y} = m\, \ddot{y}} \tag{6}$$

Note it is assumed here that the ***nominal velocity*** is ***constant,*** and the ***nominal pressure*** and ***damping forces*** cancel from the force summation. Hence, the force summation represents changes from the nominal, constant velocity condition.

Rearranging Eq. (6) and substituting for the pressure from Eq. (5) gives

$$\boxed{m\, \ddot{y} + \left(b + \frac{A_c^2}{k_p} \right) \dot{y} = A_c \left(\frac{k_x}{k_p} \right) x} \qquad (X > 0) \tag{7}$$

If $X < 0$, then $p = (A_r \dot{y} - k_x x) / k_p$ and $\underset{+}{\rightarrow} \sum F = -p\, A_r - b\, \dot{y} = m\, \ddot{y}$. In this case, the model equation is

$$\boxed{m\, \ddot{y} + \left(b + \frac{A_r^2}{k_p} \right) \dot{y} = A_r \left(\frac{k_x}{k_p} \right) x} \qquad (X < 0) \tag{8}$$

Note that x and y are still measured ***positive*** to the ***right***.

Notes:

- Because the ***piston areas*** A_c and A_r are ***not equal***, Eqs. (7) and (8) represent ***two different*** dynamic responses. The hydraulic cylinder will respond differently in extension and retraction.
- Conversely, if the cylinder is a ***double-rod cylinder*** with $A_c = A_r$, the same model applies in both directions. Extension and retraction dynamics will be identical.
- The motions described by Eqs. (7) and (8) are ***second-order***, ***over-damped*** responses.
- If the mass of the load is small $(m \approx 0)$, then the response is ***first order***.

Effects of Compressibility for Air

If the fluid is ***compressible***, then Eq. (4) relating the volumetric flow rate and the piston velocity is ***not valid***. To find a replacement for Eq. (4), the ***conservation of mass*** is applied to the control volume (CV) on the cap end of the cylinder shown in the diagram.

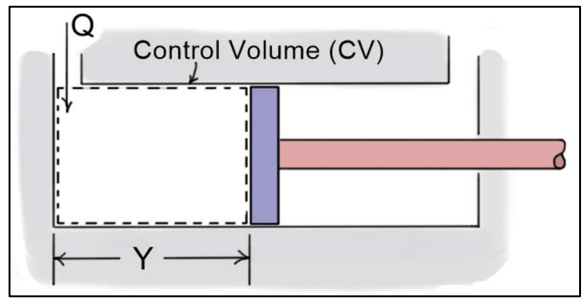

Assuming the ***CV*** is a ***fixed volume*** and that the fluid density ρ ***varies*** with ***time*** but ***not spatial location*** within the volume, then

$$\boxed{\begin{aligned}\dot{m} = 0 &= \frac{\partial}{\partial t}\left(\int_{CV} \rho d\mathcal{V}\right) + \int_{CS} \rho \underset{\sim}{V} \cdot d\underset{\sim}{A} \\ &= \underbrace{\dot{\rho}\mathcal{V}_{CV}}_{\substack{\text{rate of change of mass}\\ \text{within the CV}}} + \underbrace{\rho \dot{Y} A_c}_{\substack{\text{mass flow rate exiting}\\ \text{CV boundary at piston}}} - \underbrace{\rho Q}_{\substack{\text{mass flow rate entering}\\ \text{CV boundary}}}\end{aligned}} \tag{9}$$

or

$$\boxed{Q = A_c \dot{Y} + A_c \dot{\rho} Y / \rho} \tag{10}$$

Furthermore, if air is assumed to follow the ***ideal gas law*** ($P = \rho RT$), then for ***constant temperature processes***

$$\dot{\rho} = \left(\frac{1}{RT}\right)\dot{P}$$

or

$$\boxed{\frac{\dot{\rho}}{\rho} = \frac{\dot{P}}{\rho RT} = \frac{\dot{P}}{P}} \tag{11}$$

Substituting from Eq. (11) into Eq. (10) gives

$$\boxed{Q = \underbrace{A_c \dot{Y}}_{\text{linear}} + \underbrace{A_c Y \dot{P} / P}_{\text{non-linear}}} \tag{12}$$

Eq. (12) is a ***non-linear equation*** relating the ***volumetric flow rate*** to the ***piston motion*** and ***pressure changes***. Letting $Y = Y_0 + y$, $\dot{Y} = \dot{Y}_0 + \dot{y}$, $P = P_0 + p$, and $\dot{P} = 0 + \dot{p} = \dot{p}$, Eq. (12) can be approximated by the linear equation

$$\boxed{q = A_c\,\dot{y} + \left(\frac{A_c Y_0}{P_0}\right)\dot{p}} \tag{13}$$

Combining Eqs. (13) and (2) gives the following equation that ***relates movement*** of the ***valve spool*** to the ***velocity*** of the ***mass*** and ***changes*** in the ***fluid pressure***.

$$\boxed{A_c\dot{y} + \left(\tfrac{A_c Y_0}{P_0}\right)\dot{p} + \left(k_p\right)p = \left(k_x\right)x} \qquad \left(X > 0\right) \tag{14}$$

This equation coupled with the equation from Newton's law $\left(\boxed{m\ddot{y} + b\dot{y} - A_c p = 0}\right)$ gives ***two equations*** to solve for the ***motion*** of the ***mass*** and the ***associated pressure changes*** as the cylinder extends.