Introductory Motion and Control
Hydraulic Positioning System III

Model Equations and Transfer Functions

Consider again the valve and cylinder hydraulic positioning system shown in Fig. 1. Previously, it was shown that this system could be modeled during extension using the following equations

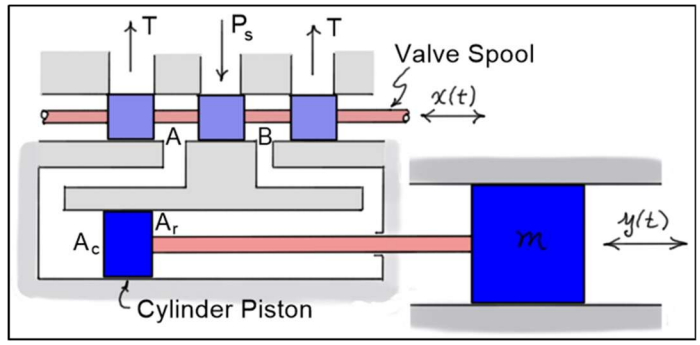

Fig. 1. Hydraulic Positioning System

$$\boxed{m\ddot{y} + b\dot{y} = p_A A_c - p_B A_r = F} \qquad (1)$$

$$\boxed{p_A = (k_{xA}x - A_c\dot{y})/k_{pA}} \qquad \boxed{p_B = (-k_{xB}x + A_r\dot{y})/k_{pB}} \qquad (2)$$

Here, F is the ***total force*** on the piston due to hydraulic pressure. Combining these equations gives a single model equation

$$\boxed{m\ddot{y} + b\dot{y} = F = \left(\frac{A_c k_{xA}}{k_{pA}} + \frac{A_r k_{xB}}{k_{pB}}\right)x - \left(\frac{A_c^2}{k_{pA}} + \frac{A_r^2}{k_{pB}}\right)\dot{y} = F_x x - F_{\dot{y}}\dot{y}} \qquad (3)$$

The symbols F_x and $F_{\dot{y}}$ represent the constant multipliers of x and $\dot{y}$ in the expression of the total hydraulic pressure force F. Eq. (3) can be represented by the block diagram in Fig. 2.

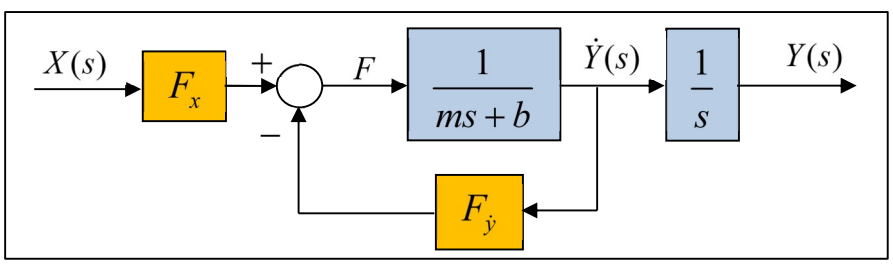

Fig. 2. Block diagram representation of Eq. (3)

Using ***block diagram reduction***, the transfer function from ***input*** $X(s)$ to ***output*** $Y(s)$ is found to be

$$\boxed{\frac{Y}{X}(s) = \frac{K}{s(s+a)}} \quad \text{with} \quad \boxed{K = \frac{F_x}{m}} \quad \boxed{a = \frac{b + F_{\dot{y}}}{m}} \qquad (4)$$

If ***valve dynamics*** is ***included*** in the model, a block needs to be added to the left side of Fig. 2. As shown in Fig. 3, the input to that block is the ***voltage command*** sent to the valve, and the output is the ***valve spool position***. It is not uncommon to model the valve dynamics as a ***second*** or ***third order*** system.

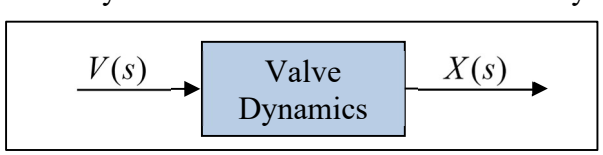

Fig. 3. Input/output of Valve Dynamics

System Identification Results: Open Loop Step Response

To get ***response data*** for the system ID process, a series of open-loop step response tests are performed. In each test, the ***valve command, valve spool position,*** and ***cylinder position*** are ***sampled*** and ***recorded***.

To ***minimize the effects of noise***, ***like signals*** from each of the tests are ***averaged***. The average valve command, spool position, and cylinder position for a series of 7-volt commands at 250 psi are shown in Fig. 4. The data were sampled at a rate of 1000 samples/second.

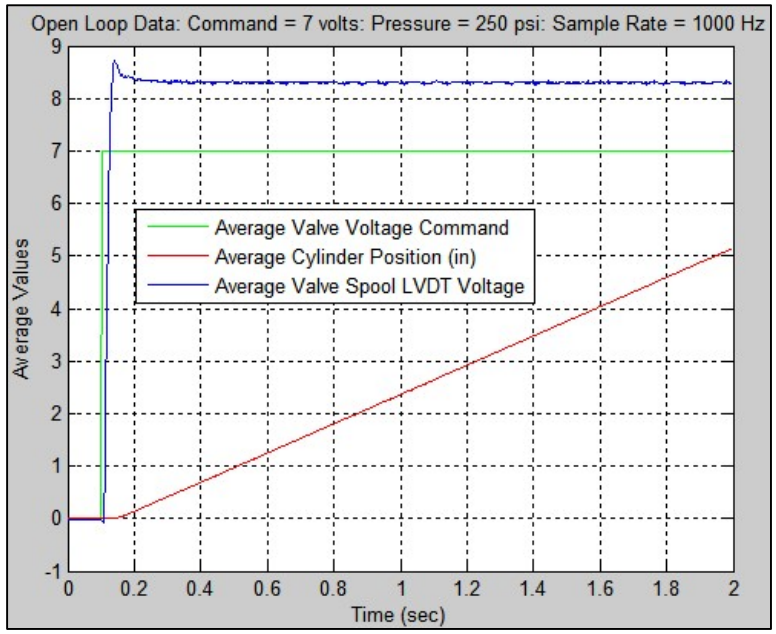

Fig. 4. Averaged Data from Open-Loop Step Response Tests

Application of the MATLAB System Identification software to this data produced the following results for the valve response. The input is the valve voltage, and the output is the valve spool position.

$$\boxed{\frac{X}{V}(s)=\frac{K}{\left(1+2\zeta T_w s+(T_w s)^2\right)\left(1+T_p s\right)}=\frac{1.1878}{\left(1+0.01s+(6.0896\times10^{-5})s^2\right)\left(1+0.0056476s\right)}}$$

Here, $K=1.1878$, $T_w=1/\omega_n=0.0078036$, $\zeta=0.63878$, and $T_p=0.0056476$. The above result can also be written as follows.

$$\boxed{\frac{X}{V}(s)=\frac{3.453747\times10^6}{\left(s^2+163.714s+16421.4\right)\left(s+177.07\right)}} \tag{5}$$

Using the same procedures, the following results were obtained for cylinder response. Here, the input is the valve spool position, and the output is the cylinder position. Note that the multiplication by s in the denominator integrates from the cylinder velocity to the cylinder position.

$$\boxed{\frac{Y}{X}(s)=\frac{K}{s\left(1+T_p s\right)}=\frac{0.33582}{s\left(1+0.036095s\right)}=\frac{9.3038}{s\left(s+27.705\right)}} \tag{6}$$

Fig. 5 shows a Simulink model of a typical hydraulic actuation system including both valve and cylinder dynamics. The transfer functions representing valve and cylinder are as given in Eqs. (5) and (6).

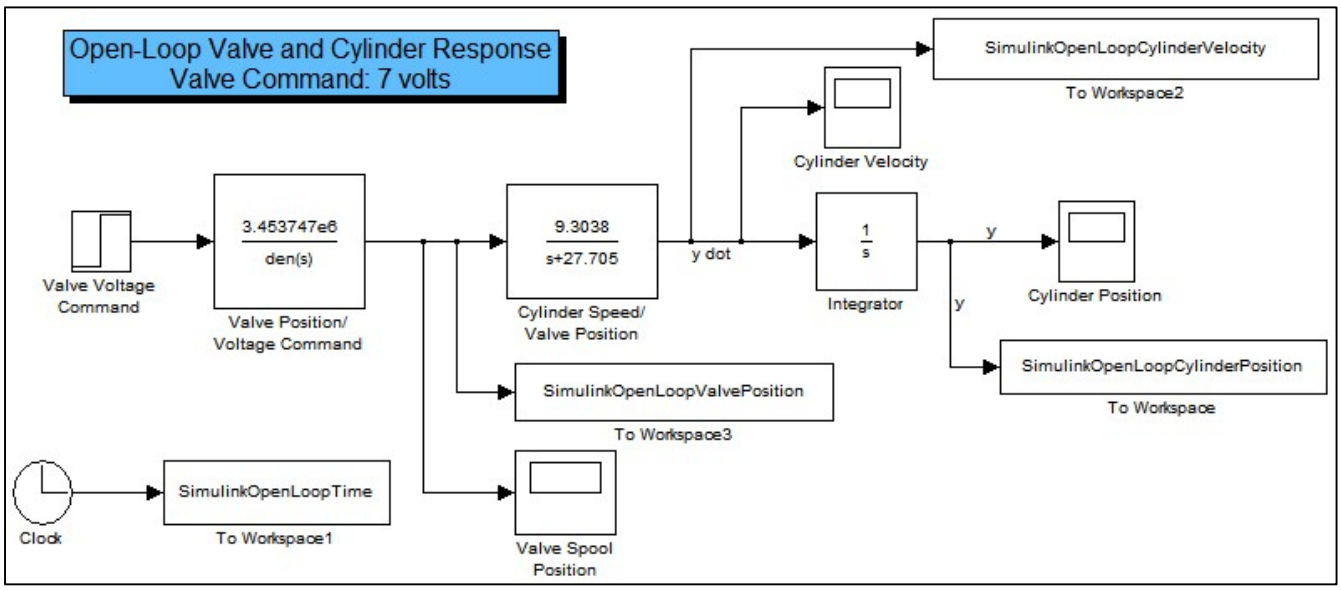

Fig. 5. Simulink Model of Open-Loop Valve and Cylinder Dynamics

To ***validate*** the ***transfer functions*** found in the system identification process, data from three test runs are compared with simulation results in Figs. 6 and 7 for the valve and cylinder responses, respectively. The valve response is plotted over the first 0.5 seconds to show the transient response. The cylinder response is plotted over the first 2 seconds to show that the steady-state cylinder velocity is correctly captured.

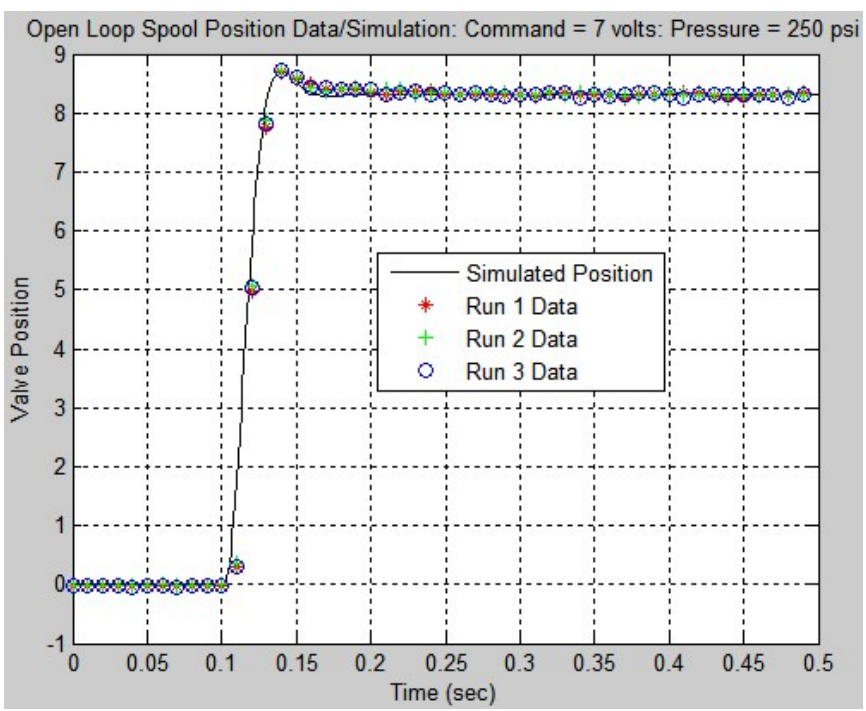

Fig. 6. Comparison of Valve Response Results: Test and Simulation

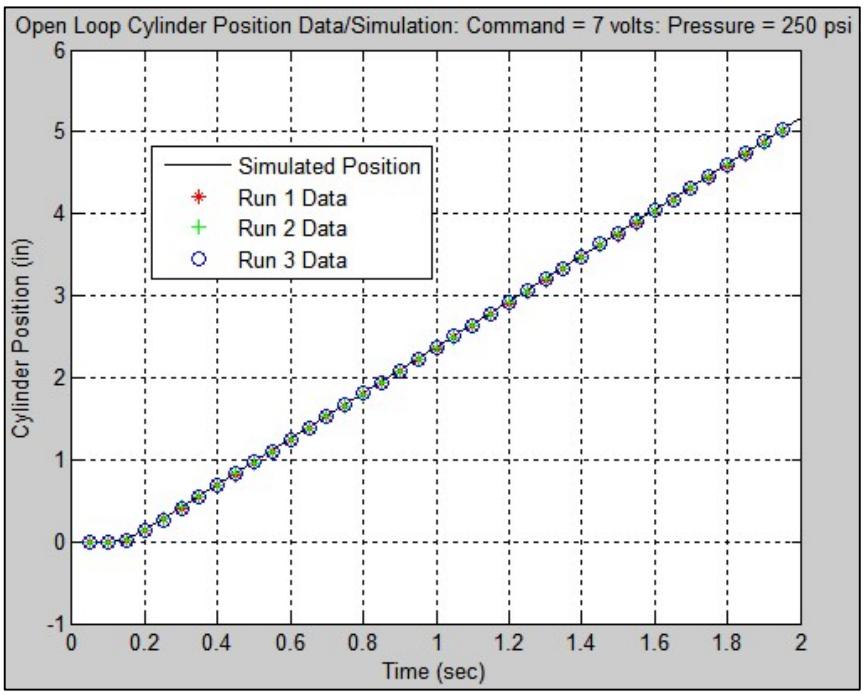

Fig. 7. Comparison of Cylinder Response Results: Test and Simulation