Introductory Motion and Control
Example: Digital Phase-Lead Control of a Spring-Mass-Damper

Position control of a spring-mass-damper system using a ***continuous phase-lead*** compensator is shown in the diagram below.

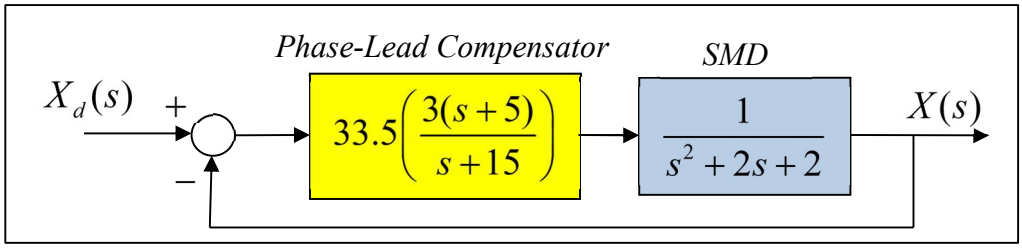

Closed-Loop Position Control of a Spring-Mass-Damper System

In the following results, the phase-lead compensator is converted to discrete form to examine the effects that ***finite sampling times*** have on performance. The compensator is converted using ***Tustin's approximation*** at sampling times of $T = 0.001$ (sec), $T = 0.01$ (sec), $T = 0.05$ (sec), and $T = 0.1$ (sec), and the resulting approximations are implemented in the Simulink model shown below.

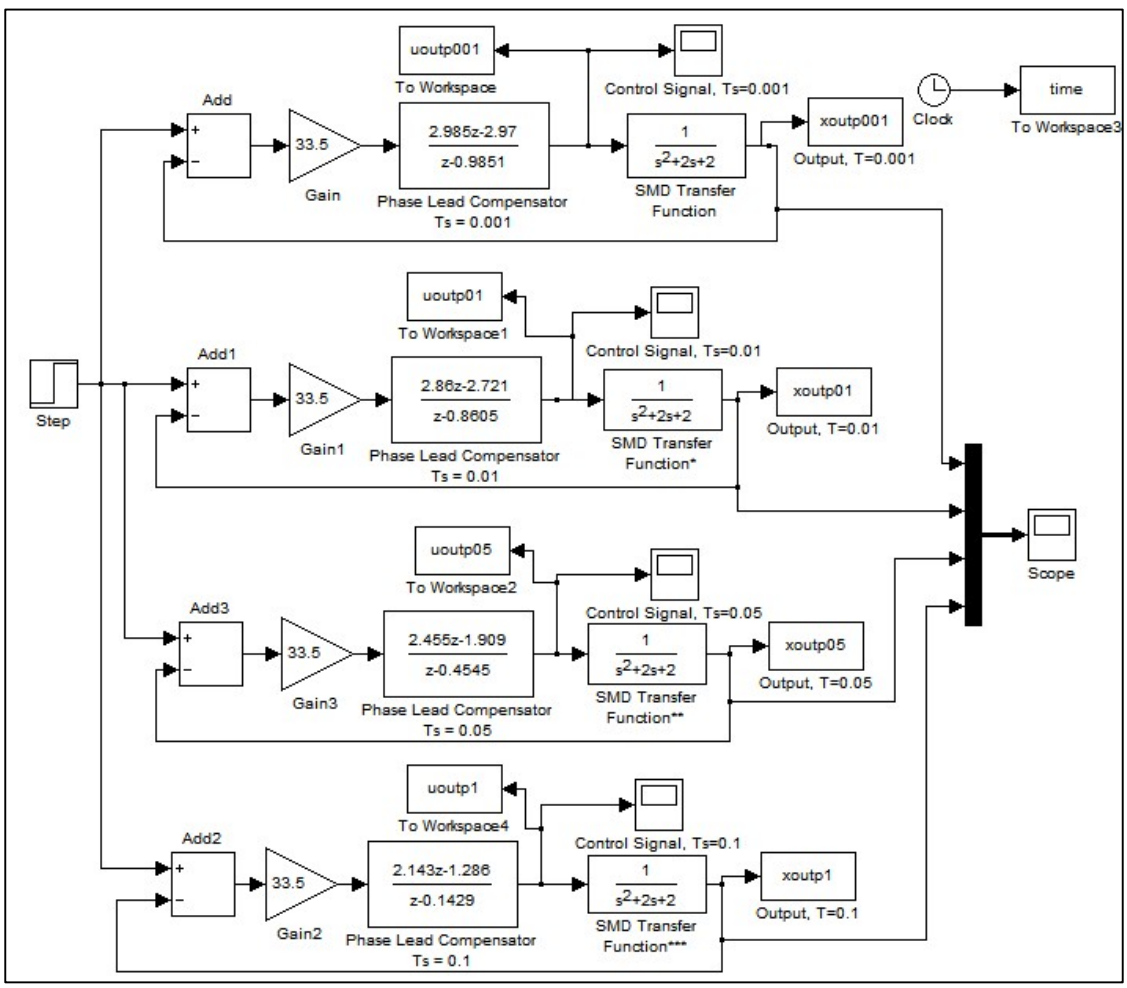

Simulink Model with Discrete Compensators

The compensator is ***modeled*** as if it were ***implemented*** using digital hardware at each of the ***four sample rates***, and the ***SMD*** is ***modeled*** as a ***continuous system***. The ***results*** for the ***four different systems*** are shown below. Note that the position control ***degrades*** as the sampling time becomes ***too large***.

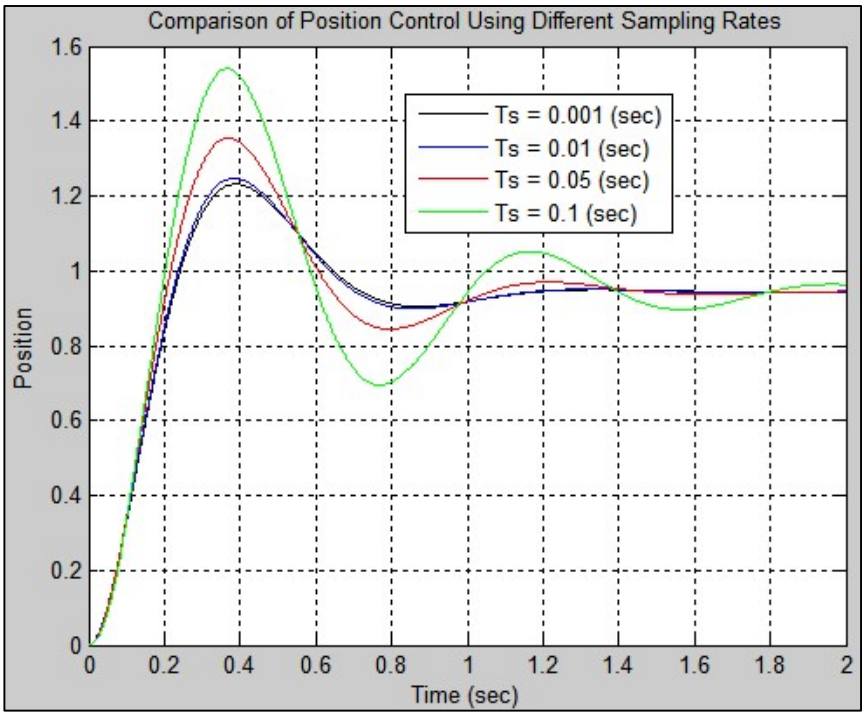

Comparison of Position Control for the Different Sample Times

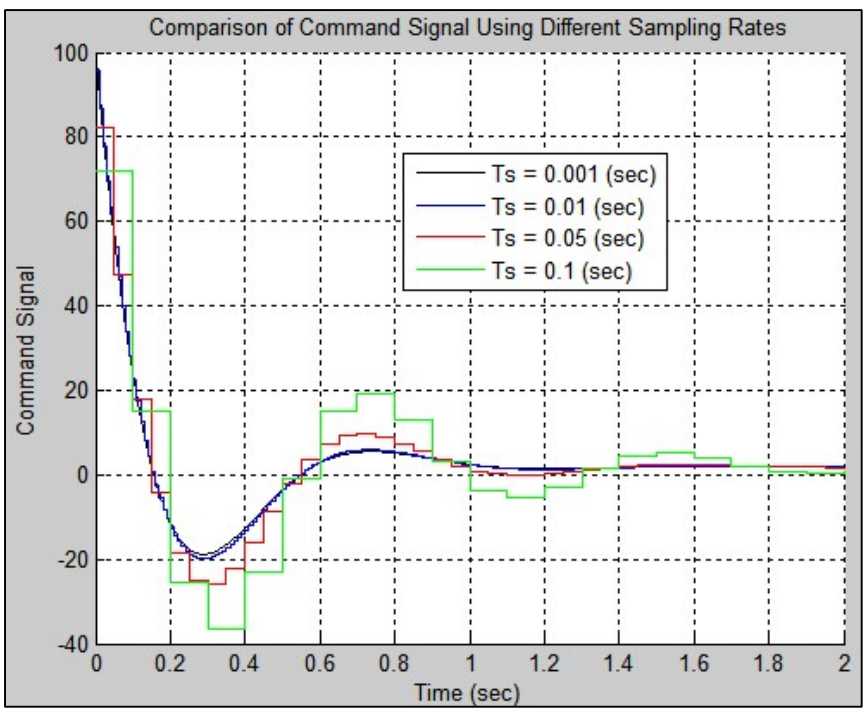

Comparison of Control Signals for the Different Sample Times

In general, ***reasonable results*** are expected when the sample rate is ***at least 20 times*** the ***closed loop system bandwidth***. The Bode diagram of the closed loop system is shown below, indicating a ***bandwidth*** of approximately $10\ (\text{rad/s}) = 1.6\ (\text{Hz})$. This result suggests that the sample rate for this system should be at least $f = 20(1.6) \approx 32\ (\text{Hz})$. This correlates to ***sample times*** of $T \leq 0.03\ (\text{sec})$. This is consistent with the results shown above.

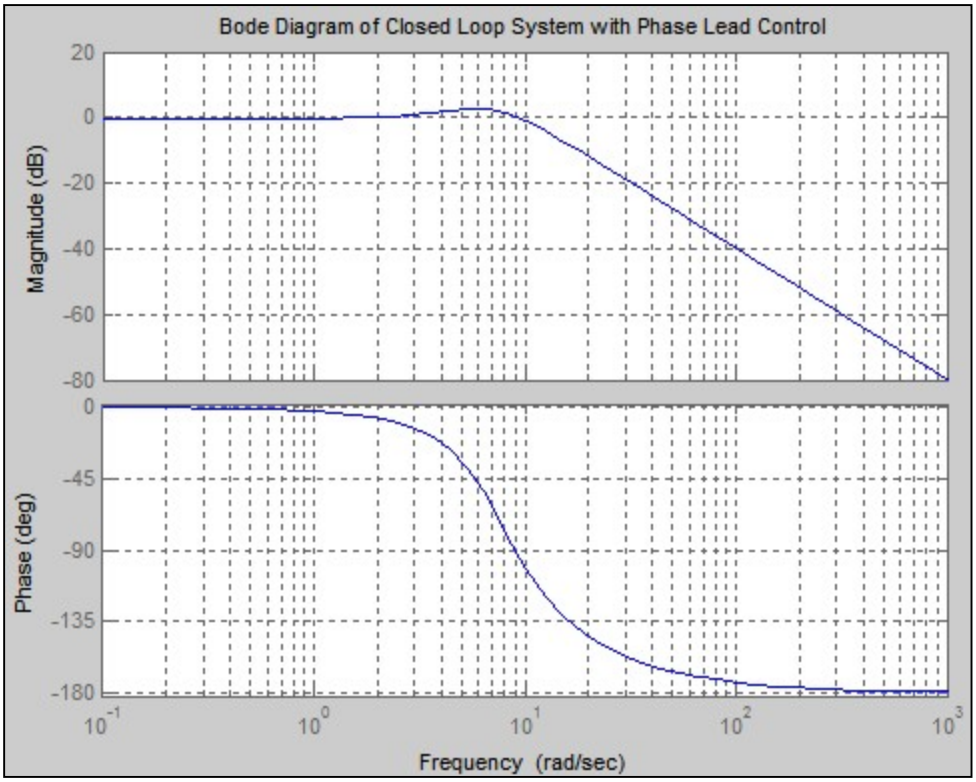

Bode Diagram of the Closed-Loop System with Phase-Lead Control