Introductory Motion and Control
Exercises #1 Basic Hydraulic Circuits

1. Explain the difference between ***fixed volume*** pumps and ***pressure-compensated, variable volume*** pumps. What is the ***major advantage*** of a pressure-compensated, variable volume pump over a fixed volume pump?

2. Explain the function of ***directional control valves*** in basic hydraulic circuits. Describe the operation of a simple hydraulic circuit that would use a ***solenoid-operated, directional control valve***. If the solenoid-operated valve in your example circuit is replaced with a ***proportional directional valve***, how will the operation of the system change?

3. At a certain location within a hydraulic circuit, the pressure is 200 (psi) and the flow rate is 2 (gpm). Calculate the fluid power at this location. Express your results in horsepower (Hp).
   Answer: $P \approx 0.233$ (Hp)

4. The flow rate through and pressure drop across an orifice can be modeled by the equation $Q = k\sqrt{p_{in} - p_{out}}$. Given the following data, estimate a value of the proportionality constant k that provides the best fit (in a least-squares sense) to the data. Plot the data along with your curve fit to verify your results.

Δp (psi)	60	80	100	120	130	140	150	160	168	200	220	240
Q (gpm)	0.793	0.925	1.06	1.12	1.16	1.22	1.27	1.29	1.32	1.45	1.52	1.59

   Answer: $k \approx 0.1027$

5. Calculate the power loss (in Hp and ft-lb/sec) through the orifice for each of the data points listed in the table of problem 4.

6. A hydraulic cylinder has an inner diameter of 1.5 (in) and a rod with an outer diameter of 1.0 (in). a) Find the speeds of extension and retraction of the cylinder, assuming an input flow rate of 2 (gpm). b) Find the pressures developed during extension and retraction assuming the cylinder has a constant resistive load of 100 (lb).

   Answers:
   a) $v_{\text{ext}} \approx 4.36$ (in/s), $v_{\text{ret}} \approx 7.84$ (in/s);
   b) $p_{\text{ext}} \approx 56.6$ (psi), $p_{\text{ret}} \approx 102$ (psi)

7. The system shown consists of a fixed-displacement pump, a pressure relief valve, a variable flow restrictor, a flow meter, and a filter. With the vent valve closed, the following data was collected during operation of the system.

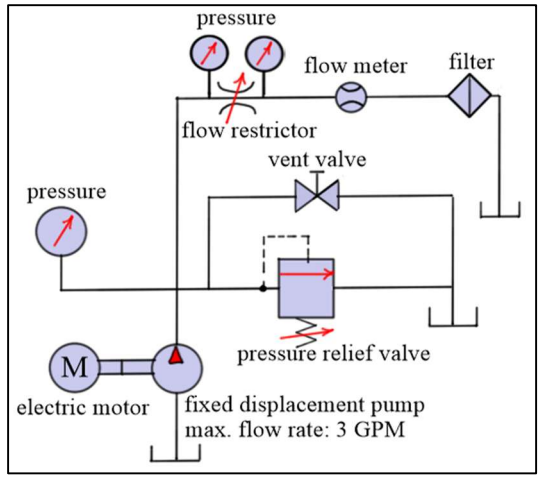

Flow Rate (Q) (gpm)	Pressure Drop (Δp) Across Flow Restrictor (psi)
1.9	120
2.4	180
2.6	220

Complete the following:

a) Assuming the flow rate through the restrictor is governed by the equation $\boxed{Q = k\sqrt{\Delta p}}$, estimate the coefficient k for this flow restrictor by averaging the values for each data pair in the table. b) Given the pressure drop across the same flow restrictor is 150 psi, estimate the flow rate and power loss through the flow restrictor. c) Estimate the flow through the pressure relief valve for the conditions of part (b). The fixed-displacement pump has a maximum flow rate of 3 (gpm).

Answers:

a) $k_{avg} = 0.1759$; b) $Q = 2.15$ (gpm), $P = 0.189$ (Hp); c) $Q_{PRV} = 0.846$ (gpm)

8. The figure shows a simple hydraulic actuation system driven by a fixed displacement pump whose maximum flow rate is 3 (gpm). The hydraulic cylinder has a piston of diameter of 2 (in), and a rod of diameter of 1.5 (in). Movement of the piston is resisted by the constant force $F = 100$ (lb). This force always acts ***opposite the motion*** of the cylinder. Neglecting losses in the hydraulic lines and the solenoid-actuated valve, and assuming a closed vent valve and ideal response for the pressure relief valve, complete the following:

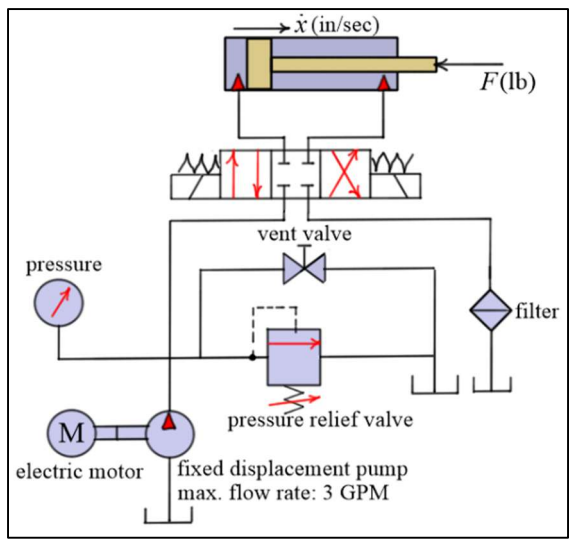

a) Find the maximum possible cylinder velocities $(\dot{x}_{ext}, \dot{x}_{ret})$ during ***extension*** and ***retraction*** of the cylinder if the relief valve remains fully closed. b) Find the ***minimum power*** that must be supplied to the pump to move the 100 (lb) load at the speed calculated in part (a) for ***extension*** of the cylinder. What is the corresponding pressure in the cap end of the cylinder? c) What is the ***maximum possible flow rate*** in this system?

Answers:

a) $\dot{x}_{ext} = 3.68$ in/sec, $\dot{x}_{ret} = 8.4$ in/sec; b) $P = 368$ (in-lb)/sec, $p = 31.8$ psi; c) $Q_{\max} = 6.86$ gpm

9. The figure shows a simple hydraulic actuation system driven by a fixed displacement pump whose maximum flow rate is $3\ (\text{gpm})$. The hydraulic cylinder has a piston of diameter of $2\ (\text{in})$, and a rod of diameter of $1.5\ (\text{in})$. Movement of the piston is resisted by the force $F\ (\text{lb})$. This force always acts opposite the motion and is known to vary with piston speed $(\dot{x}\ (\text{in/s}))$ as $|F| = 100 + (20|\dot{x}|)\ (\text{lb})$. Given the pressure relief valve is set to open at $100\ (\text{psi})$, complete the following. Neglecting losses in the hydraulic lines and the solenoid-actuated valve, and assuming a closed vent valve and ideal response for the pressure relief valve, complete the following: a) Estimate $(\dot{x}_e)_{\max}$ the ***maximum possible extension speed*** of the cylinder. Will the relief valve open during extension? b) Estimate $(\dot{x}_r)_{\max}$ the ***maximum possible retraction speed*** of the cylinder. Will the relief valve open during retraction?

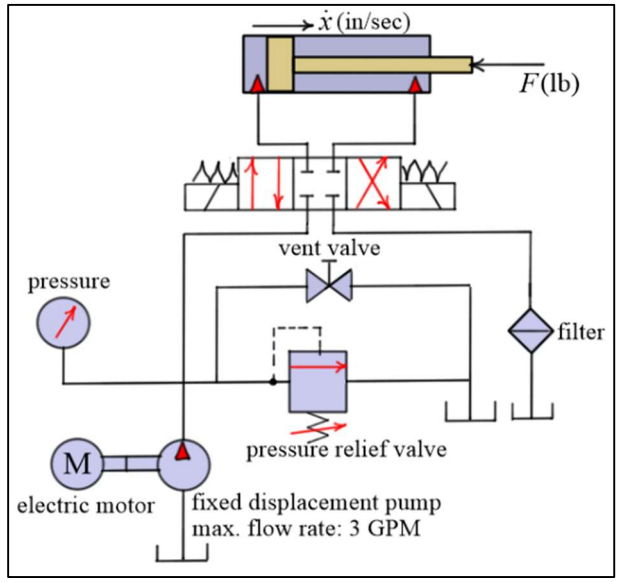

Answers:

a) relief valve does not open with $(\dot{x}_e)_{\max} \approx 3.68\ (\text{in/s})$; b) relief valve opens with $(\dot{x}_r)_{\max} \approx 1.87\ (\text{in/s})$

10. The figure shows a ***metering-out circuit*** for a hydraulic cylinder. The system has a 3 (gpm) fixed-displacement pump, and the hydraulic cylinder has cap-end and rod-end areas of $A_c = 2\ (\text{in}^2)$ and $A_r = 1\ (\text{in}^2)$. The flow from the rod end of the cylinder passes through a ***variable flow control valve*** with a check valve by-pass. A flow meter is in the return line. Neglecting losses in the hydraulic lines and the solenoid-actuated valve, and assuming a closed vent valve and ideal response for the pressure relief valve, complete the following: a) Briefly describe the ***role*** of the ***check valve*** in this system. b) During an ***extension cycle***, the flow meter measures $1\ (\text{gpm})$. Find $\dot{x}_{ext}$ the speed of the cylinder extension, Q_c the flow rate into the cap end of the cylinder, and Q_{PRV} the flow rate over the pressure relief valve. c) Is it possible to have flow

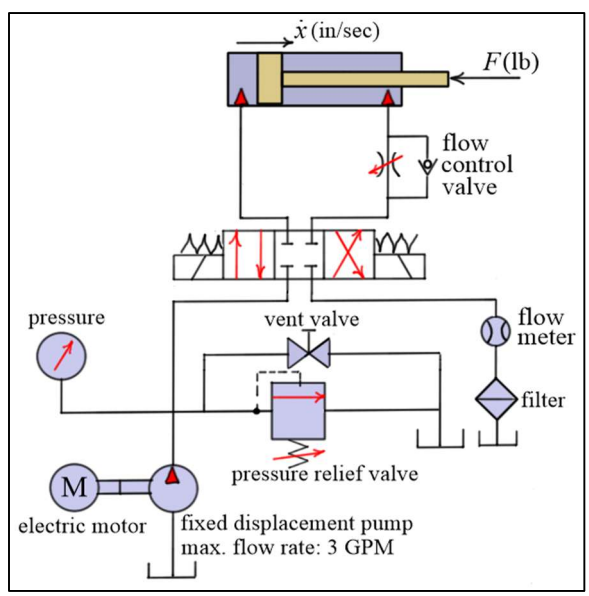

rates in this system higher than $3\ (\text{gpm})$? If so, what is the maximum rate you expect, and where does it occur? d) Can the pressure anywhere in this system be greater than the cracking pressure of the pressure relief valve? If so, where? Consider all possible settings of the flow control valve from ***fully open*** to ***fully closed***. Assume the pressure relief valve is set to open at $300\ (\text{psi})$. e) Given the pressure at the ***inlet*** of the flow control valve is measured to be 250 (psi), and the pressure at the ***outlet*** of the flow control valve is measured to be 50 (psi), find the power loss over the restriction in horsepower (HP). Assume the pressure relief valve remains fully closed.

Answers:

a) The check valve forces flow through the flow control valve (restriction) during cylinder extension but allows the flow to avoid the restriction during retraction.

b) $\dot{x}_{ext} = 3.85\ (\text{in/sec})$, $Q_c = 2\ (\text{gpm})$, $Q_{PRV} = 1\ (\text{gpm})$

c) Yes, if the flow over the pressure relief valve is zero during retraction, then $Q_{\text{rod}} = 3\ (\text{gpm})$ and $Q_{\text{cap}} = 6\ (\text{gpm})$. The maximum flow rate is $6\ (\text{gpm})$ out of the cap end of the cylinder.

d) Yes, if the flow control valve is completely closed, then $p_{\text{cap}} = 300\ (\text{psi})$ and $p_{\text{rod}} = 600\ (\text{psi})$.

e) $P_{loss} = 0.175\ (\text{Hp})$

11. The system shown represents the hydraulics portion of a closed-loop hydraulic cylinder positioning system. An electronic control system manages the spool position of a linear proportional control valve to control the position (x) of the attached hydraulic cylinder. Explain the phenomenon of dead-band of a linear proportional control valve. What affect does dead-band have on the operation of the closed-loop positioning system? What types of components exhibit dead-band in electromechanical systems?

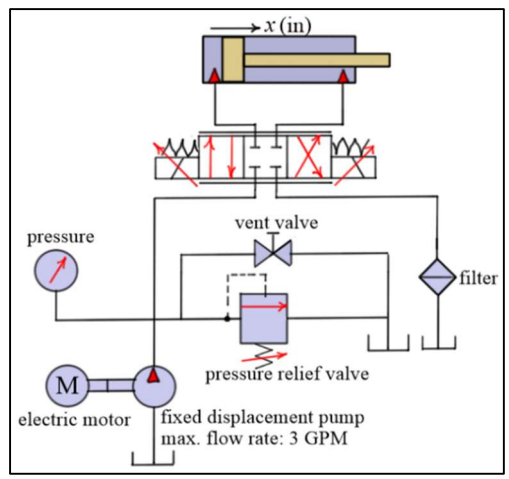
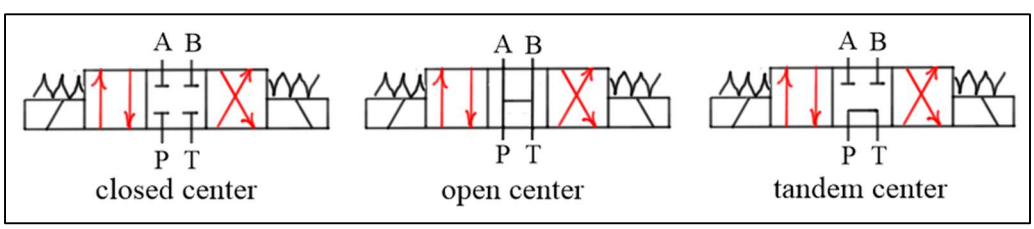
12. The diagram shows representations of solenoid-actuated directional control valves with closed centers, open centers, and tandem centers. The symbols "P" and "T" represent the pressure and tank lines, and the symbols "A" and "B" represent the valves working ports. Explain the differences between these different types of centers. Also explain how the hydraulic actuation system of problem 8 would behave differently with each of these types of valve centers.