Multibody Dynamics
Exercises #7 – Use d'Alembert's Principle

1) Find the differential equation of motion of the single degree-of-freedom system shown. The system consists of slender bar AB of mass m and length ℓ and a piston P of mass m_p. The system is driven by the force $F(t) = F_0 + F_1 \sin(\omega t)$ and gravity. A spring and damper are attached to the light slider at B. The spring is unstretched when $x = 0$. Use θ as the generalized coordinate. Neglect friction.

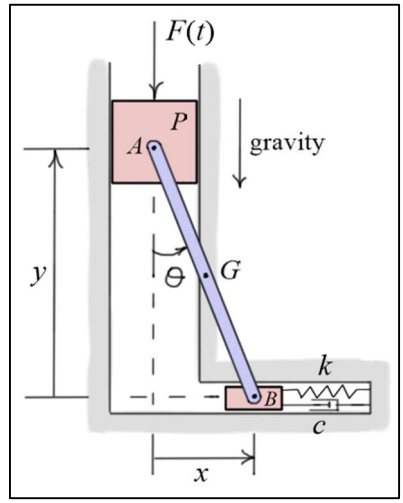

2) Find the differential equations of motion of the two degree-of-freedom system shown. The system consists of a mass m_1 that moves along a fixed horizontal bar and a slender bar AB pinned to m_1 at A. Bar AB has mass m_2 and length ℓ. Mass m_1 is attached to the fixed support by a spring of stiffness k and a viscous damper with damping coefficient c. The spring is unstretched when $x = 0$. The system is driven by gravity and the force $F(t) = F_0 \sin(\omega t)$ applied to m_1. Use x and θ as the generalized coordinates. Neglect friction.

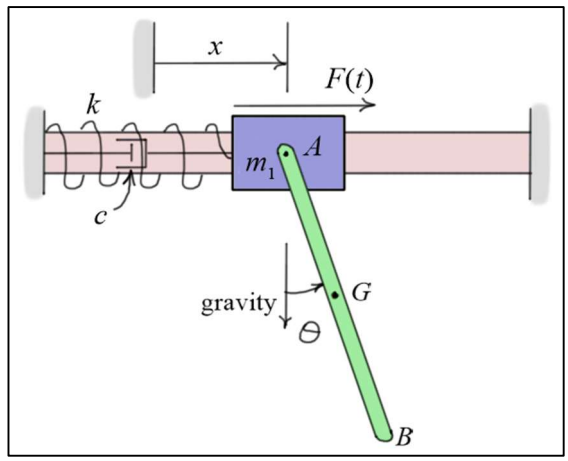

3) Find the differential equations of motion of the two degree-of-freedom system shown. The system consists of a slender bar B of length ℓ and mass m pinned through the center of a shaft of mass m_s and radius r. The rotation of the shaft about the Z-axis is described by the angle ϕ $(\dot{\phi} = \Omega)$, and the rotation of bar B about the Y'-axis axis is described by the angle θ $(\dot{\theta} = \omega)$. A motor torque M_ϕ is applied to the shaft about the Z-axis, and a motor torque M_θ is applied to B about the Y'-axis. Use θ and ϕ as the generalized coordinates.

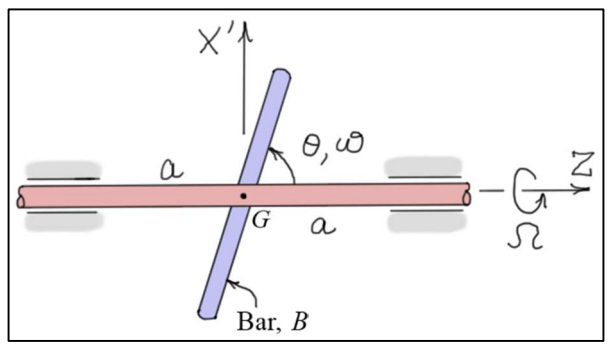
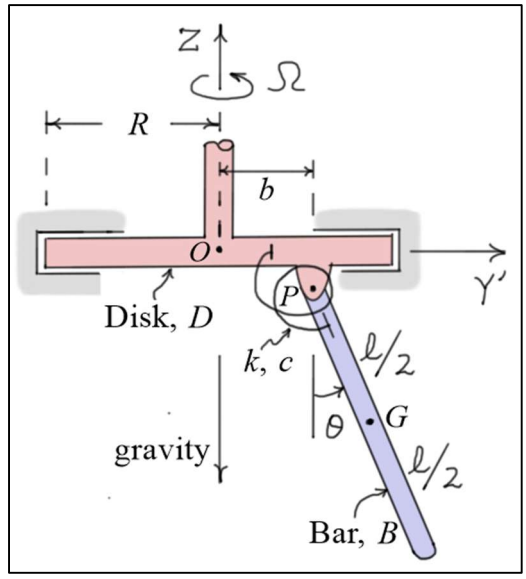
4) Find the differential equations of motion of the two degree-of-freedom system shown. The system consists of a disk D of mass m_d and radius R, and a slender bar B of mass m and length ℓ. The rotation of the disk about the Z-axis is described by the angle ϕ $(\dot{\phi} = \Omega)$, and the rotation of the bar B about the X'-axis is described by the angle θ $(\dot{\theta} = \omega)$. A rotational spring-damper is located between B and D at the pin P. The spring has stiffness k and is unstretched when $\theta = 0$. The damper has coefficient c. A motor torque M_ϕ is applied to the disk about the Z-axis, and a motor torque M_θ is applied to B about the X'- axis. Use θ and ϕ as the generalized coordinates.